SUPERWINCH®

OWNER'S MANUAL

INSTALLATION • OPERATION • MAINTENANCE
SAFETY PRECAUTIONS • REPAIR PARTS

MODEL X2 & X2F

12 & 24 Volt DC Electric Winches
Part Nos. 1201, 1208, 1213
and 1215

⚠ CAUTION

READ AND UNDERSTAND THIS MANUAL BEFORE INSTALLATION AND OPERATION OF YOUR SUPERWINCH PRODUCT.

Superwinch, Inc.
Winch Drive
Putnam, CT 06260
U.S.A.
Tel. (860) 928-7787
Fax (860) 928-1143

Superwinch, Ltd.
Abbey Rise, Whitchurch Road
Tavistock, Devon PL 19 9DR
England
Tel. +44 (0) 1822 614101
Fax +44 (0) 1822 615204

90-12531 Rev J– 4/17/00

INTRODUCTION

Thank you for purchasing a Superwinch product. We hope and expect that you will be pleased with the performance and reliability of this unit. If you are not, for any reason, please contact our Customer Service Department: (860) 928-7787 USA; +44 (0) 1822 614101 England.

When requesting information or ordering replacement parts; always give the following information:

1. Winch Part Number (1201, 1208, 1213, and 1215)
2. Part Number (found in Replacement Parts List section)
3. Part Description

It is extremely important that you read and understand this Owner's Manual prior to installing and using your winch. Pay particular attention to "General Safety Information" and be sure that anyone else who might use your winch also studies this section.

⚠ CAUTION ***Pay particular attention to the caution notes preceded with this symbol. The notes contain advice for your protection.***

UNPACKING: This carton contains the following items. Please unpack carefully. **Read instructions before beginning.**

Description	Quantity
Winch assembly with wire rope and hook installed	1
Switch and harness assembly with two 5' long 8-gauge wires	1
and Handsaver	1
Circuit breaker assembly with hardware	1
Poly bag containing: 2 bolts, 2 lock washers, 2 nuts, 4 flat washers and 5 cable ties	1

PERFORMANCE

Volt DC	Load lbs	Load kg	Speed Ft/min	Speed m/min	Motor Current Amps
12	0	0	27	8.2	30
	3,000	1360	5	1.5	220
24	0	0	25	7.6	15
	3,000	1360	9	2.7	110

SPECIFICATIONS

Working Load . . . 3,000 lbs. (1,360 kg)
Stall Load . . . . . 3,500 lbs. (1,588 kg)
Wire Rope . . . . . 7/32" x 40 ft.
Voltage . . . . . 12 or 24 Volt DC
Motor . . . . . .1.3 hp
Gear Ratio 148:1
Weight . . . . . 24 lbs. (11 kg)

ROLLING LOAD CAPACITY**

Slope*	10% (6°)	20% (11°)	30% (17°)	100% (45°)
Lbs.**	12,500	8,500	6,525	3,210
kg**	5670	3856	2960	1456

Ratings assume a 10% coefficient of friction.
* A 10% slope is a rise of one foot in ten feet. Slope in approximate degrees is also shown above.
** All loads shown are for single-line operation (see Figure 1). Double-line operation with optional pulley block (P/N 2227) approximately doubles capacity of winch (see Figure 1).

GENERAL SAFETY INFORMATION

Your new Superwinch is a powerful machine. Treat it with respect, use it with caution and always follow these safety guidelines.

1. The X2 winch is rated at 3,000 lbs. (single-line) capacity. **DO NOT OVERLOAD. DO NOT ATTEMPT PROLONGED PULLS AT HEAVY LOADS. DO NOT MAINTAIN POWER TO THE WINCH IF THE MOTOR STALLS.** Overloads can damage the winch and/or the wire rope and create unsafe operating conditions. **FOR HEAVY LOADS, WE RECOMMEND THE USE OF THE OPTIONAL PULLEY BLOCK AND HOOK ASSEMBLY (PART NO. 2227) TO DOUBLE-LINE THE WIRE ROPE** (Figure 1). This reduces the load on the winch and the strain on the wire rope by approximately 50%.

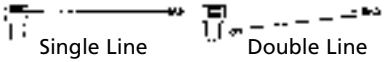

Figure 1

2. **AFTER READING AND UNDERSTANDING THIS MANUAL, LEARN TO USE YOUR WINCH.** Practice using it so you will be familiar with it when the need arises. Periodically check the winch installation to assure that all bolts are tight.
3. **DO NOT** "move" your vehicle to assist the winch in pulling a load. The combination of the winch and vehicle pulling together could overload the wire rope and the winch itself.
4. **KEEP WINCHING AREA CLEAR**. Do not allow people to remain in the area during winching operations. Do not step over a taut wire rope or allow anyone else to do so. Do not stand between the winch and load.
5. **INSPECT WIRE ROPE AND EQUIPMENT FREQUENTLY. A FRAYED WIRE ROPE WITH BROKEN STRANDS SHOULD BE REPLACED IMMEDIATELY.** Always replace wire rope with the manufacturer's identical replacement part, (see Replacement Parts List). Never replace the wire rope with any kind of rope other than the type and size specified in the Wire Rope section of this manual.
6. **USE HEAVY LEATHER GLOVES** when handling wire rope. **DO NOT LET WIRE ROPE SLIDE THROUGH YOUR HANDS**. A broken strand could seriously injure your hands.
7. **KEEP CLEAR OF THE WINCH, WIRE ROPE, AND HOOK WHEN OPERATING WINCH. NEVER** put your fingers through the hook when reeling in the last few feet of line. If your finger should become trapped in the hook, you could be injured. Use the **HAND SAVER BAR** (Figure 2) to guide the hook within the last few feet. Never guide a wire rope on or off the drum with your hand.

Figure 2

GENERAL SAFETY INFORMATION (CONT.)

8. **NEVER HOOK THE WIRE ROPE BACK ONTO ITSELF.** Use a nylon sling (Superwinch Part No. 1509). Hooking the wire rope onto itself can damage the rope (Figure 3).

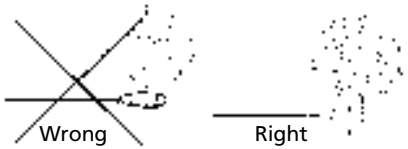

Figure 3

9. Lay a heavy blanket or jacket over the wire rope near the hook end when pulling heavy loads (Figure 4). If a wire rope failure should occur, the cloth will act as a damper and help prevent the rope from whipping. Raise the hood of the vehicle for added safety.

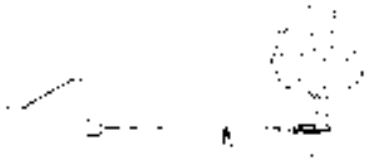

Figure 4

10. **NEVER USE YOUR WINCH FOR LIFTING OR MOVING PEOPLE.** The winch is not designed nor intended for use in lifting or moving people.
11. Your winch is not designed or intended for overhead hoisting operations.
12. **AVOID CONTINUOUS PULLS FROM EXTREME ANGLES** as this will cause the wire rope to pile up at one end of the drum (Figure 5). This can jam the wire rope in the winch, causing damage to the wire rope or winch itself.

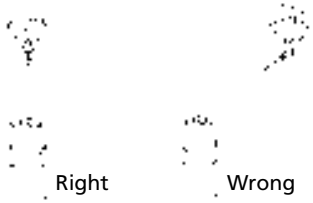

Figure 5

13. Always operate winch with an unobstructed view of the winching operation.
14. **IT IS RECOMMENDED THAT A FAIRLEAD BE USED** to guide the wire rope onto the winch. Two types of fairleads are offered: the Hawse Fairlead, Part No. 1507, and the Roller Fairlead, Part No. 1560.
15. **DO NOT OPERATE WINCH WHEN UNDER THE INFLUENCE OF DRUGS, ALCOHOL OR MEDICATION.**
16. **ALWAYS REMOVE THE SWITCH BEFORE WORKING IN OR AROUND THE WIRE ROPE, FAIRLEAD, OR WINCH DRUM (THE DANGER ZONE)** so that the winch cannot be turned on accidentally.
17. **NEVER WORK ON OR AROUND THE FAIRLEAD OR WINCH DRUM, WHEN WINCH IS UNDER LOAD.**
18. When using your winch to move a load, place the vehicle transmission in neutral, set vehicle parking brake, chock all wheels, and keep the engine running.

GENERAL SAFETY INFORMATION (CONT.)

19. **DO NOT USE THE WINCH TO HOLD LOADS IN PLACE.** Use other means of securing loads such as tie down straps. Superwinch offers a wide variety of tie down straps. Contact your local Superwinch dealer.
20. **USE ONLY FACTORY APPROVED SWITCHES, REMOTE CONTROLS, AND ACCESSORIES.** Use of non-factory approved components may cause injury or property damage and could void your warranty.
21. **DO NOT MACHINE OR WELD ANY PART OF THE WINCH.** Such alterations may weaken the structural integrity of the winch and could void your warranty.
22. Maintain 5 turns of wire rope around wire rope drum to prevent the wire rope from pulling off under load.
23. **NEVER INSTALL WINCH IN SUCH A WAY THAT THE WARNING AND INSTRUCTION LABELS ARE OBSCURED.** Someone who had not read this manual may need to see them to understand the proper operation of the winch. **ALWAYS CHECK FOR CORRECT DIRECTION OF ROTATION BEFORE USING WINCH.** The winch must be properly wired to ensure correct direction of rotation.
24. When moving a load, slowly take up the wire rope slack until it becomes taut. Stop, recheck all winching connections. Be sure the hook is properly seated. If a nylon sling is used, check the attachment to the load.
25. Always install winch in such a way that the operator will be standing with a comfortable posture, with unobstructed access to, and a clear view of the winch, its labels, and its controls.

INSTALLATION

TOOLS NEEDED FOR MOUNTING AND WIRING

Open End Wrenches – 9/16", (2), or small adjustable wrenches, wire strippers, or cutters, terminal crimpers (pliers), torque wrench, pair 3/8" bolts and nuts, four flat and two lock washers.

MOUNTING

The mounting location for the winch must be capable of handling the loads you intend the winch to pull. Suggested locations are: a flat front or rear bumper of a vehicle, on a pickup truck bed or the winch stand on a trailer.

The winch can be mounted in a horizontal or vertical position (Figure 6). Do not mount the winch where there would be the possibility of it being submerged in water. The winch is weather resistant but not waterproof.

Superwinch mounting (fitting) kits are available for most popular vehicles. If you can't obtain a kit locally, contact Superwinch at the address listed in this manual for the name of a Superwinch dealer near you.

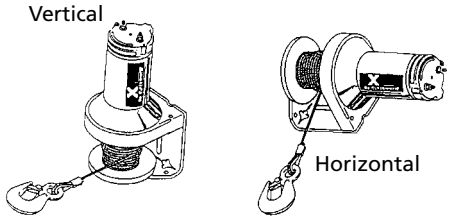

Figure 6

MOUNTING (CONT.)

Drill two 7/16" (12mm) diameter holes with center lines exactly 3-11/16" (93.66mm) apart (Figure 7) in the support chosen for the winch. Attach the winch to the support with two (2) 3/8-16 Grade 5 Hex Head Bolts. Be sure the hardware is assembled as shown. Tighten the hardware to 35 lb. ft. torque.

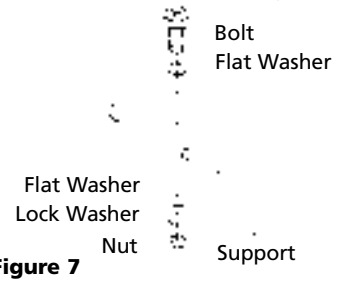

Figure 7

ELECTRICAL INSTALLATION

This winch operates on standard automotive 12-or 24-Volt Direct Current, not both.

⚠ CAUTION ***Do not connect winch to 110 Volt house current. Motor damage or fatal shock may occur.***

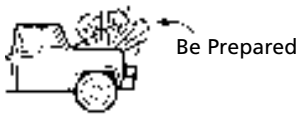

⚠WARNING ***Automobile batteries contain gasses which are flammable and explosive. Wear eye protection during installation and remove all metal jewelry. Do not lean over the battery while making connections.***

The red wire from the switch is connected to the circuit breaker terminal with the hardware provided. The other end of the circuit breaker is connected to the battery positive terminal. The black wire from the switch is connected to the battery negative terminal, or to a metal ground such as the vehicle frame (Figure 8). Be sure connections are clean and tight. Do not connect the switch or wiring to any other power source in the vehicle.

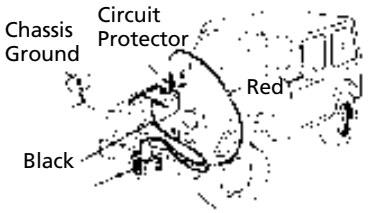

Figure 8

Starting at the winch, feed the wires into the engine compartment. If possible, use the routing and support for the existing wiring.

If it is necessary to drill holes, to feed the wires, be sure the wires are protected from damage by using a grommet (Figure 9). Use cable ties to secure wires along the route.

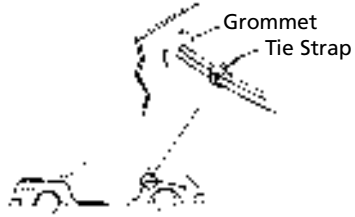

Figure 9

When you make the ground connection, be sure to scrape off any dirt from the bolt that would prevent a good connection.

Note: If the winch is mounted at the rear of the vehicle, a special wiring kit (P/N 1520) is available from Superwinch.

When extending the lead wires for rear vehicle mount, always use 8 gauge wire or heavier to extend the existing wires to the battery.

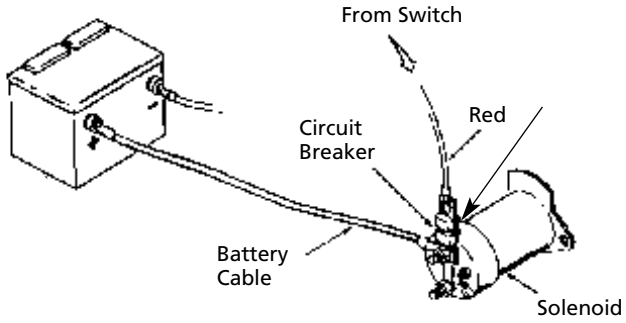

Figure 10

If connection to the battery positive terminal is not possible because of the terminal design, connect the circuit protector to the starter solenoid "hot" side. Determine the "hot" side by tracing the battery cable to the solenoid connection. Connect the circuit breaker to the same terminal to which the battery cable is connected (Figure 10).

Note: Special adapters are available from your local Auto Parts Dealers for making connections to Side Post Batteries.

The switch and motor end are designed so the switch will mount properly only when installed as shown in Figure 11. Do not attempt to install the switch in the opposite direction. If the switch is installed incorrectly and electrical contact made, the winch will run in a direction opposite that which is indicated on the product label resulting in possible operator injury.

Figure 11

Secure the switch to the motor by tightening the round thumb screw on the outside of the switch (Figure 12). The screw threads into the tapped hole between the brass motor contact (Figure 11). Do not use pliers or over-tighten the thumb screw.

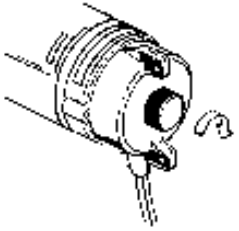

Figure 12

After the switch is in place, remove excess slack from the wiring harness in the vehicle by doubling over slack areas and tying securely. Do not leave any dangling or loose wiring.

OPERATION

SWITCH OPERATION

When the switch springs back to the "OFF" position, an electrical shunt provides dynamic braking action which prevents the winch from coasting (Figure 13). **THIS BRAKING ACTION IS NOT A LOAD HOLDING DEVICE.** When the switch is centered in the "OFF" position, the shunt reduces the action of a load to backdrive the winch. However, a load can cause the winch to creep. With the switch removed from the winch, there is a greater tendency for a load to backdrive the winch.

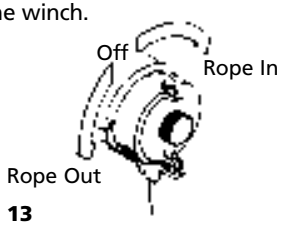

Figure 13

⚠WARNING ***The winch is not designed as a load holding device.***

The switch should be removed from the winch when unattended to prevent unauthorized operation. A Quickconnect (Superwinch P/N 1551) is also available as an accessory to disarm the winch. Because the winch will not hold a load, in trailing or load holding applications, tie down ropes or straps must be used to secure loads.

Remote operation of the switch (Figure 14) can be achieved by tying one end of a cord through each "ear" of the switch.

Figure 14

FREE SPOOL OPERATION - MODEL X2F

To disengage the clutch for free-wheeling the wire rope out, pull the knob at the wire rope end of the winch straight out and rotate the knob 90° (1/4 turn). The wire rope can be pulled out by hand (Figure 15). Avoid jerking the wire rope off the drum when freespooling as this can cause the wire rope to backlash and snarl on the drum.

Note: The clutch cannot be released if there is a load on the wire rope.

To engage the clutch, turn the clutch knob until the square key drops into the inner drum shaft (Figure 16). Activate the control switch on the winch until the key drops into the outer drum shaft. Check that the key is fully engaged before applying a load to the wire rope.

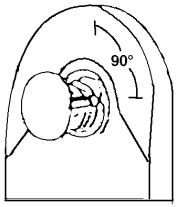

Figure 15

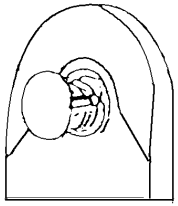

Figure 16

MAINTENANCE

Periodically check tightness of the mounting bolts and electrical connections. Remove any dirt or corrosion that may have accumulated on the electrical connection.

LUBRICATION

Your new winch has lifetime lubrication. There will be some grease leaking out of the winch, especially during the first few operations. This is normal and it is not necessary to grease or oil any part of the winch at any time.

WIRE ROPE

A part of your winch that will require periodic attention and eventual replacement is the wire rope. Inspect the wire rope for wear frequently. If fraying exists, replace the wire rope at once. Your winch uses 7/32" diameter galvanized aircraft type 7 x 9 wire rope that is 40 feet long (5,600 lb. breaking strength). Always replace the wire rope with Superwinch replacement wire rope, P/N 1513 (See pages 12 and 13).

TROUBLE SHOOTING

If the winch motor labors and then stops, the load is too great. Evidence of this will be a motor almost too hot to touch. Repeated occurrence of this condition indicates that the load exerted on your winch is beyond its capacity and may burn out the winch motor. Use of the accessory pulley block, P/N 2227, will increase the winch's capacity.

MOTOR DOES NOT OPERATE

Follow these steps in order. Make sure your vehicle engine is running and then try operating your winch after each step.

1. Remove switch, then replace it on the motor, making certain that it is aligned properly over brass motor connectors and that thumb screw is snug.
2. Check all electrical connections on battery and ground, making sure that they are clean and tight.
3. Check the wiring harness to determine if all insulation is intact. Damaged insulation could cause a short circuit.

TIPS F0R EXTENDING THE LIFE OF YOUR WINCH

1. **KEEP A TIGHTLY AND EVENLY WOUND WIRE ROPE DRUM.** Do not allow the wire rope to become loosely wound. A loosely-wound drum allows a wire rope under load to work its way down into the layers of wire rope on the drum. When this happens, the wire rope may become wedged within the body of the windings, damaging the wire rope. To prevent this problem, keep the wire rope tightly and evenly wound on the drum at all times. During winching, periodically check to see that the wire rope is winding on evenly. A good practice is to rewind the wire rope under tension after each use. One way to do this is to attach the hook to a stationary object at the top of a small hill or incline and winch your vehicle up the incline.
2. **DO NOT ALLOW MOTOR TO OVERHEAT.** Remember, the winch is only for intermittent use. During long or heavy pulls the motor will get hot. The internal parts will be hotter than the case. To check the motor temperature, stop winching and carefully touch the motor. If the motor is uncomfortably warm, allow the motor to cool before continuing. Keep the engine running to recharge the battery during this break.
3. **USE A PULLEY BLOCK FOR HEAVY LOADS.** To maximize winch and wire rope life, use a pulley block, P/N 2227, to double-line heavier loads.

Figure 17

4. The pull required to start a load moving is often much greater than the pull required to keep it moving. **AVOID FREQUENT STOPPING AND STARTING DURING A PULL.**

5. **PREVENT KINKS BEFORE THEY OCCUR.**

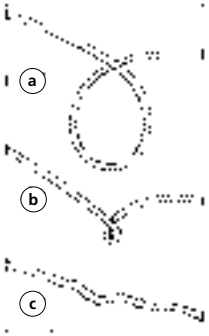

Figure 18

a. This is the start of a kink. At this time, the wire rope should be straightened.

b. The wire rope was pulled and loop has tightened into a kink. Wire rope is now permanently damaged and must be replaced.

c. The result of kinking is that each strand pulls a different amount causing strands under greatest tension to break and reduce load capacity of the wire rope. The wire rope must be replaced.

6. **EQUIPPING THE WINCH WITH A ROLLER FAIRLEAD,** P/N 1560, Figure 19, will substantially reduce wear on the wire rope during angle pulls. The rollers eliminate heavy rubbing and abrasion to the wire rope.

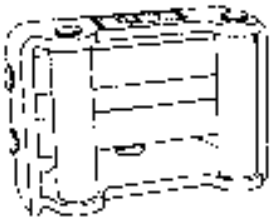

Figure 19

REPLACEMENT PARTS LIST

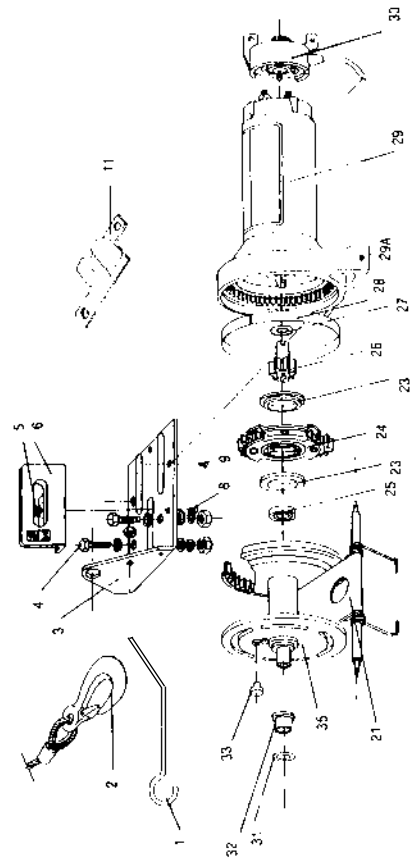

Model No X2

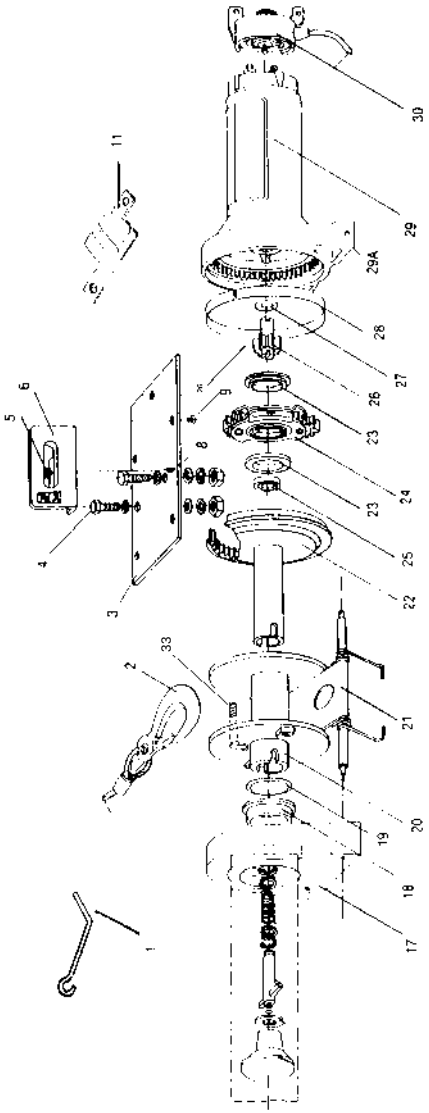

Model No X2F

REPLACEMENT PARTS LIST

Reference Number	Description	Part Number	Qty
1	Handsaver	90-32300	1
2	7/32" x 40' Wire Rope and Hook Assembly	1513	1
3	Base Plate, Model X2	90-41019	1
	Base Plate, Model X2F	90-32067	1
4	Pair 3/8" Bolts & Nuts, 4 Flat and 2 Lock Washers	90-22892	1
5	1/4 - 20 Flange Nut	90-23149-02	1
6	Wire Rope Guide	1507	1
8	1/4 - 20 x 3/4" Hex Soc. Flat Head Screw	90-23056-04	1
9	5/16 - 18 x 3/4" Hex Soc. Flat Head Screw	90-23056-02	2
11	Circuit Breakers Assembly	90-22873	1
16	Free Spool Shaft Ass'y	90-12534	1
17	Outboard Housing	90-32058	1
18	Flange Bushing	90-23167-01	1
19	Washer	90-23120-11	1
20	Drum Assembly, Model X2F Only	90-32054	1
21	Wire Rope Tension Plate Set, Model X2	90-12450	1
	Wire Rope Tension Plate Set, Model X2F	90-12536	1
22	Rotating Drive Shaft Assembly	90-32057	1
23	Carrier Bearing	90-23140	2
24	Planetary Gear Assembly	90-23138	1
25	Nylon Step Washer	90-12418	1
26	8 Tooth Sun Gear	90-23141	1
27	Flat Thrust Washer	90-23120-08	1
28	Perimeter Bearing	90-23137	1
29	1.3 H.P. 12 Volt Motor with Gearbox and Needle Bearing. Primed	90-12452	1
29A	Main Gearbox with Needle Bearing	90-12454	1
30	Replacement Switch Assembly with (2) 3 Foot Leads Includes two Butt Splices for connecting to old harness	1519	1
31	Shim Washer	90-23120-05	1
32	Bushing	90-12174	1
33	Wire Rope Retainer	90-12419	1
35	Drum Assembly	90-32034	1